Modular High-Precision Pressure Indicator Model CPG 8000

Applications

- National institutes and institutions
- Research and development laboratories
- Industry (laboratory, workshop and production)
- Calibration service companies

Special features

- Up to 4 sensors can be integrated
- Pressure ranges: from 0 ... 100 mbar to 0 ... 2500 bar
- Total uncertainty of measurement: 0.05 % ... 0.008 % (certified)
- Over pressure safety (up to 400 bar)
- Easy retrofitting

High-Precision Pressure Indicator CPG 8000

www.Laheghi.com

Description

Areas of application
The CPG 8000 is a modular pressure system incorporating up to 4 high-precision pressure sensors and a barometric reference a option.
Due to its certified uncertainty of up to 0.008 % the system is especially suitable as a factory / working standard for the calibration or testing of any pressure measuring instrument. Its modular construction enables it to be adapted to suit all customer's requirements.

Functionality
The high-resolution colour graphics display, on which up to 4 windows with many extras can be viewed simultaneously, is a new feature for an instrument of this class. They can be used to display the pressure signal in different pressure units or to activate various functions.
8 programmable relay outputs, a data logger and various functions, such as Min, Max, Hold, Zero, Average, Pressure rate or Zero point adjustment ensure that the precision pressure systems can be used for many different applications.

Software
WIKA calibration and documentation software EasyCal is available to make the calibration of any type of pressure measuring instrument easy and enable calibration certificates to be produced. Furthermore there are also software drivers available for the creation of complex test programs under LabVIEW®.

Complete testing and calibration systems
An IEEE-488.2 and a RS-232 interface exist for communication with other instruments, and therefore the instrument can be integrated into an existing compound system, or, on request, customised mobile or stationary test systems can be manufactured.

Calibration software EasyCal *see Data Sheet CT 95.01*
Pressure supply case, Filling tube *see Data Sheet CT 91.41*
Precision pressure reducing valve, Volume displacer *see Data Sheet CT 91.42*

WIKA
Part of your business

Dimensions in mm

Desk top model

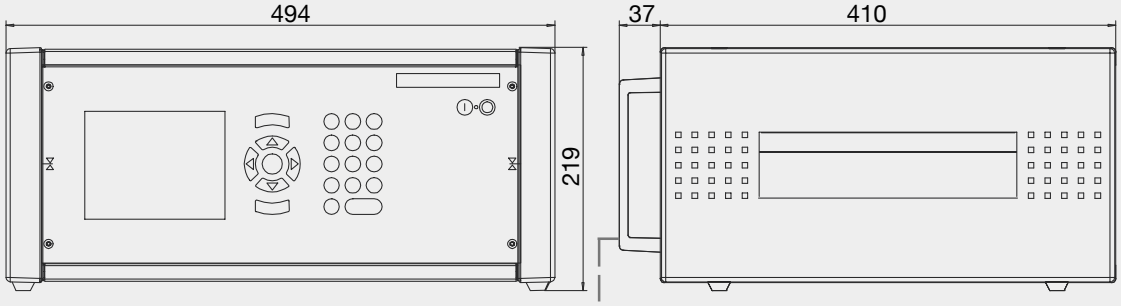

19“ plug-in case

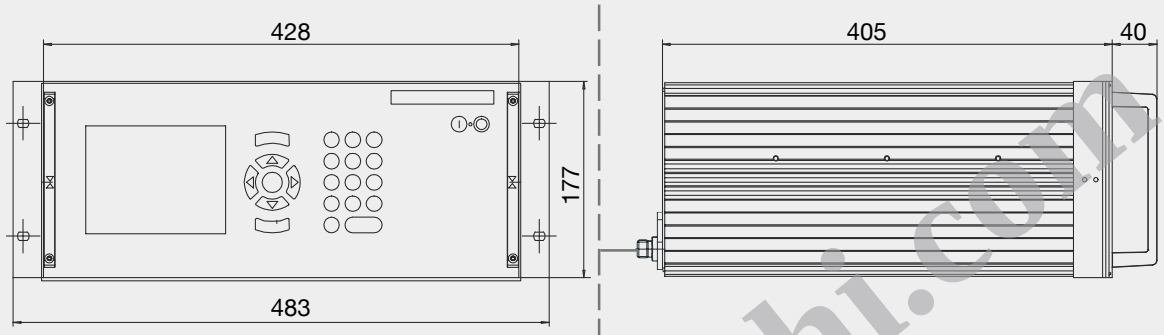

Rear view

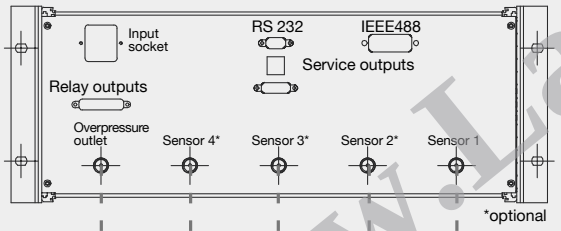

Optional adapters

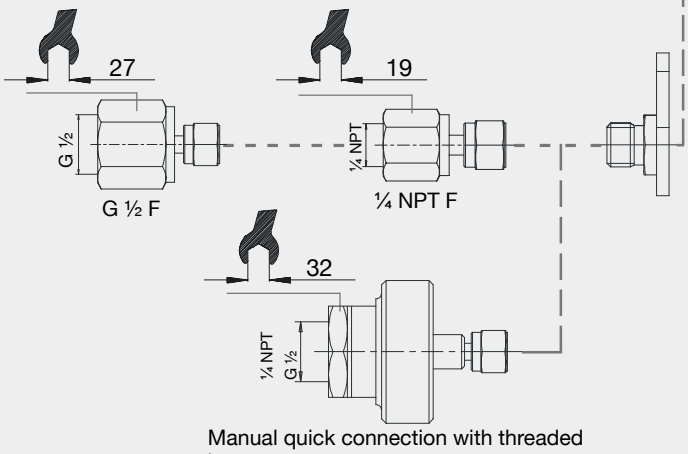

Pressure ports: (depending on pressure range)
up to 400 bar: 6 mm SWAGELOK® tube fitting
over 400 bar: ¼“ SNOTRIK® tube fitting

www.Laheghi.com

Specifications		CPG 8000
Number of integratable sensors (selectable)	pcs.	1 ... 4
Pressure range [1]	bar	0 ... 0.1 up to 0 ... 2500 (sensor related)
Total uncertainty of measurement [1]		0.05 % FS up to 0.008 % IS [2] (sensor related)
Pressure ports		
- up to 400 bar (standard version)		6 mm SWAGELOK(R) tube fitting
- over 400 bar (high pressure version)		¼“ SNOTRIK(R) tube fitting
Pressure ports adapter		on request
Tube material		stainless steel 1.4571 & 1.4401 (all connections without seals)
Overpressure protection (up to 400 bar)		safety valves, scaled to 120% of FS
Instrument version		desk top / 19” plug -in case
Screen		TFT-Colour graphics display (320 x 240 Pixel)
Screen division	windows	1, 2 or 4
Indication of measured values	digits	up to 7
Measuring rate	values/sec.	up to 8 (sensor related)
Keyboard		Membrane keyboard
Evaluation unit		Motorola 50 MHz Power PC-Board
Operating system		Windows CE
Digital interface		RS-232 and IEEE-488.2
Relay outputs		8 programmable change-over contacts
Power supply		100-240 VAC, 50 / 60 Hz, <55 VA
Permissible		
Media		sensor related; for any noncorrosive liquid resp. clean, dry air or nitrogen
Operating temperature	°C	15 ... 35
Storage temperature	°C	0 ... 70
Air humidity	%	35 ... 85 relative humidity without moisture condensation
Ingress protection		IP 31 (front panel IP 41)
Weight	Kg	10 ... 17 (dependent on sensors used)
Dimensions		see technical drawings
CE-mark		conformity certificate
Calibration [3]		with DKD calibration certificate; others on request

1) For pressure ranges available and accuracies please see current price list.
2) IntelliScale offers a total uncertainty of measurement of 0.008 % of Reading in the upper 2/3 of the span and 0.008 % of 1/3 FS in the lower one-third of the span.
3) Calibrated in a horizontal mounting position.

www.Laheghi.com

Wiring details

The input socket and the digital interfaces (see Rear view on Page 2) should/must only be connected with specific connection cables approved for this purpose.

Relay outputs (8 potential free change-over contacts)
Condition of wiring scheme as shown: inactive
Output capacity of relays: max. 1 A / 30 VDC

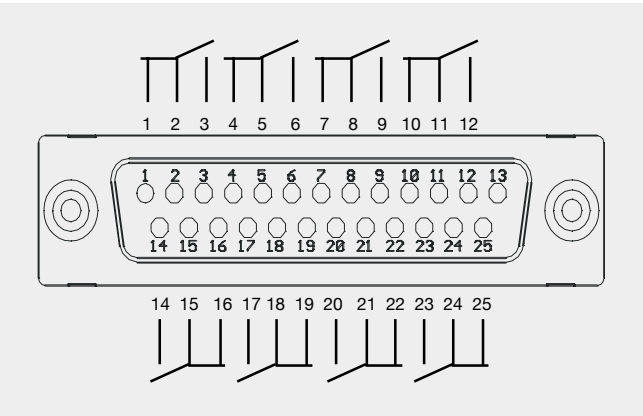

Examples of display (up to 4 windows can be viewed simultaneously)

Single window example

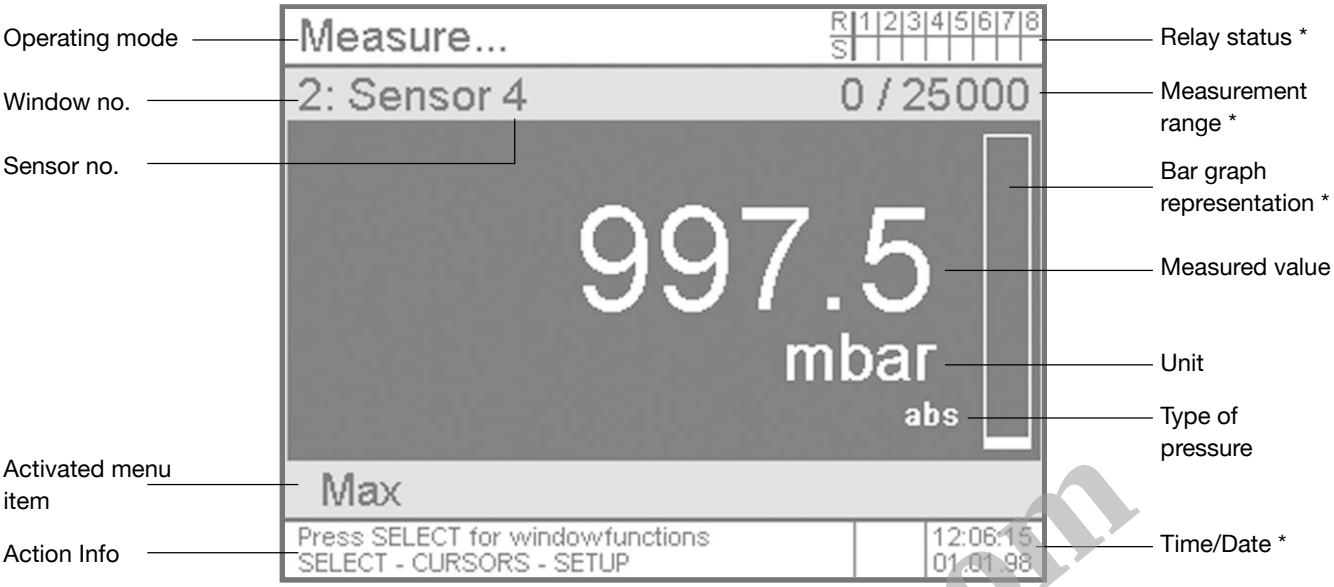

* can be masked out

4 Window example

The windows can be used:

- To display more than one sensor signal
- To display one signal in different pressure units
- To display the difference between 2 sensor signals
- To activate one or two functions

www.laheghi.com

Automatic calibration through CPG 8000 and PC Calibration Software EasyCal

The WIKA calibration software has been developed for the calibration (testing device monitoring) of mechanical and electronic pressure gauges according to ISO 9000.

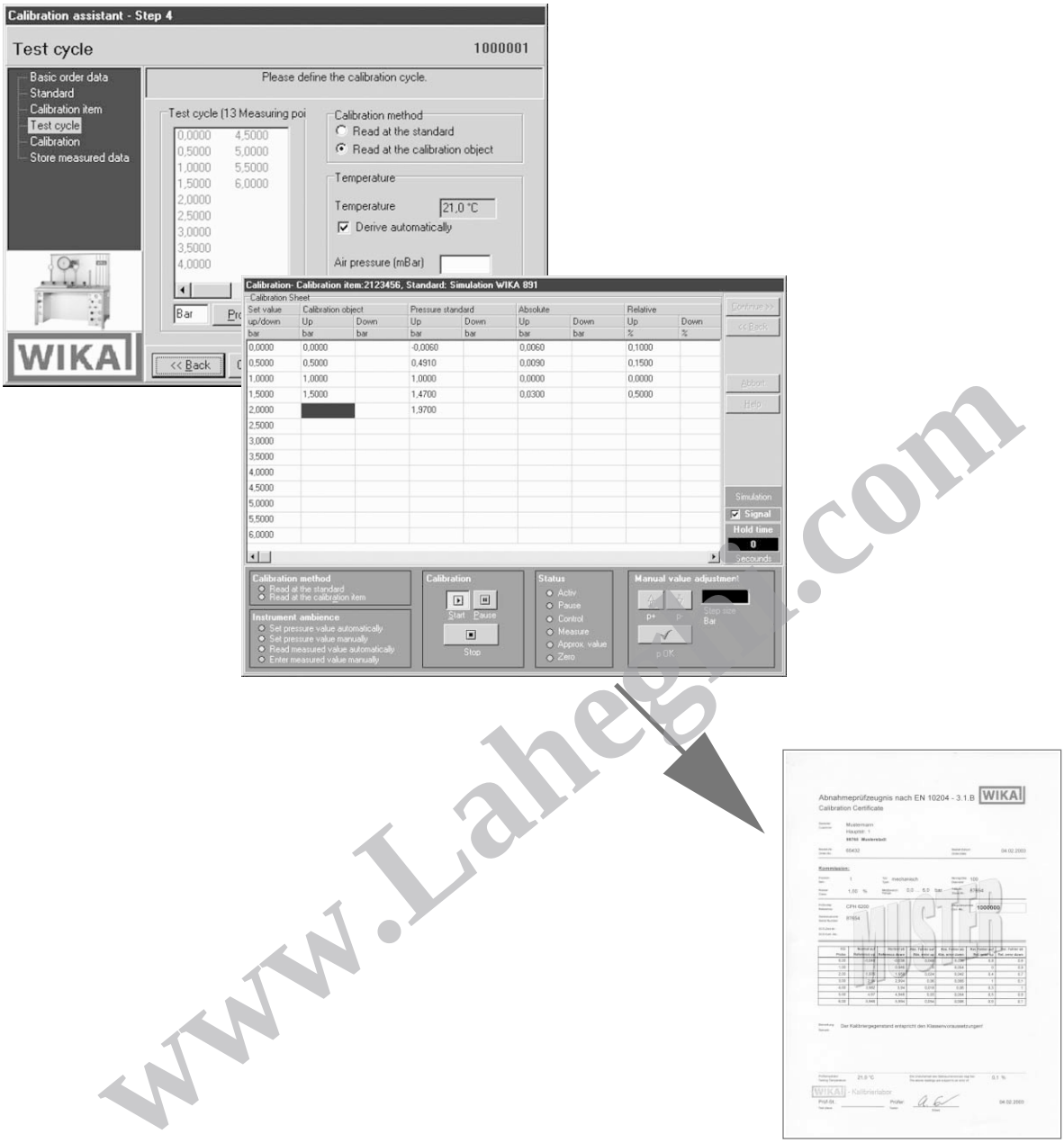

www.Lahegal.com

The software offers:

- Calibration assistant that guides through a calibration
- User-friendly menu
- Automatic generation of calibration steps according to EN 837-1
- Certificates in accordance with EN 10204 - 3.1.B
- Customised test protocols possible (Access Report-Designer)
- Archiving of calibration data as well as instrument administration via Access database
- Language: English/German

DEMO-Version available (free of charge)

Application example

Scope of supply

- High-Precision Pressure Indicator CPG 8000
- Mains cable 1.5 m with mains plug
- Operating instructions in English
- DKD certificate per measuring chain (or comparable certificate)

Options

- 19” plug-in case
- Up to 4 sensors can be integrated
- Barometric reference
- Complete testing and calibration systems

Accessories

- Rugged transport box (aluminium)
- Pressure adapter and manual quick connection adapter
- Interface cable
- Calibration software EasyCal
- Driver for software LabVIEW(R)
- Instruments for pressure generation
- Service tools

Application example

www.Laheghi.com

Products and Services within our Testing and Calibration Technology Program

- DKD calibration services for pressure
- Repair of calibration units of all makes
- Portable pressure measuring devices for testing and calibration tasks
- Precision pressure measuring units and pressure controllers
- Primary standards for pressure
- Testing technology system solutions
- DKD calibration services for temperature
- Temperature dry well calibrators
- Calibration baths and furnaces
- Temperature measuring instruments for testing and calibrating tasks
- Precision thermometers
- Primary standards for temperature
- Consulting and training

Specifications and dimensions given in this leaflet represent the state of engineering at the time of printing.
Modifications may take place and materials specified may be replaced by others without prior notice.

9027114 10/2003 GB

WIKA Alexander Wiegand GmbH & Co. KG
Alexander-Wiegand-Straße 30
63911 Klingenberg / Germany
Phone (+49) 93 72/132-9986
Fax (+49) 93 72/132-217
E-Mail testequip@wika.de
www.wika.de